Sphero Maxi 62cm back inlet

ILLUSTRATED

S0740	Sphero Maxi 62cm back inlet, closed shroud
S8915	Trap 1½" plastic bottle with 75mm seal, multi-purpose outlet

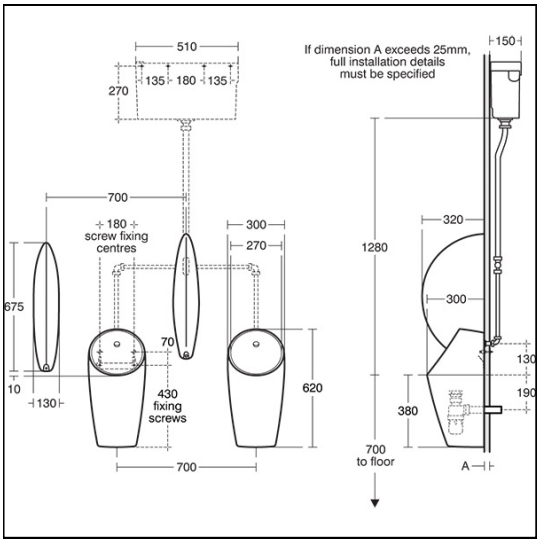

OPTIONS

R0103	Prosys back inlet urinal frame (specific urinals only)
R0163	Prosys urinal frame for use with Sensorflow (specfic urinals only)
S6215	Conceala auto cistern 4.5 litre with cover, auto syphon and petcock
S6216	Conceala auto cistern 9.0 litre with cover, auto syphon and petcock
S6217	Conceala auto cistern 13.6 litre with cover auto syphon and petcock
S6226	Flushpipes concealed for 1 bowl urinal
S6227	Flushpipes concealed for 2 bowl urinals
S6228	Flushpipes concealed for 3 bowl urinals
S6229	Flushpipes concealed for 4 bowl urinals
S6230	Flushpipes concealed for 5 bowl urinals
S9276	Toggle bolts to suit maximum 25mm panel thickness
E2025	Sphero waste cap

ILLUSTRATED PRODUCT DETAILS

Weights

S0740	21.04 KG
S8915	0.24 KG

Materials

S0740	Vitreous China
S8915	Plastic

Finishes

S0740		White (01)
S8915		Neutral / No Finish (67)

Designer

Robin Levien, RDI

Standards

BS EN 13407

Special Notes

when installing the urinal with Sensorflow electronics and mains water with a DC interrupter, please refer to the installation instructions in relation to the pipework size required, which must be adhered to. See options, or the urinal cisterns section for relevant tank options. See options, or the traps, wastes & fixations section for selection of multi-bowl and pipework ranges. For sensor flush see Sensorflow 21 urinal flushing device page. The waste can be accessed from the top with an easy to use service key.

Brackets, spreader and cap, waste pack with service key and back inlet connection pack all included. (bottle trap to be purchased seperately).

FEATURES

Ideal Standard (UK) Ltd. makes every effort to ensure that the information provided on its website is accurate. However, we cannot guarantee this, and accept no liability for any information or advice given via its website.